PROJECT 2015 - 2019

Smart faust

GRAME
SMARTFAUST

MUSIC FOR SMARTPHONES

Creation 2014
Biennale Musiques en Scène
29th March 2014
Les Subsistances - Lyon

Centre national de création musicale
11 Cours de Verdun-Gensoul
69002 Lyon - France

INTRODUCTION ABOUT **SMARTFAUST**

© Pascal Chantier

« SmartFaust is both the title of a participatory concert and the name of several apps devised by Grame for smartphones, through Faust notation language. The concert takes place in two stages: the execution of three works for a «chorus» of mobile phones and soloists and a fourth piece , which involves the public. The «chorus» is made up of volunteers (between 10 and 30 persons, musicians or not) who have completed a workshop of 3 x 3 hours with the composer.
The choir will accompany 3 solo instrumentalists in the first three works of the program. The soloists are part of the Ensemble Op. Cit. but could be proposed by the organizer.
The originality of the second part of the concert is to engage the public in an instantaneous creation , without prior rehearsals or special musical skill using only mobile phones and almost without touching the screen ! The music will be played by the public under the direction of « gestures » of the composer. Indeed, it is the movement of phones that generate sounds and not a « strumming » on the screen . SmartFaust is open to all. Web links will be provided before the concert for the public to pre- install on their smartphone the applications required.
By becoming a «player» of a musical piece , participants will experience the sensation of being musicians.
Thus getting on the side of «doing» , they certainly will experience a new audio sound as material, texture etc ...»
Xavier Garcia

ABOUT FAUST TECHNOLOGY

Musical applications used for the smartfaust concert rely on the Faust technology developed at Grame. Faust is first of all a high-level notation for describing very concisely musical instruments or sound effects. Faust is also a machine translation system, a sort of virtual programmer, which develops the computer programs corresponding to the description.
Interestingly the same Faust description can be used to create applications for Linux, Mac, Windows, iOS and Android. Moreover applications created for iOS and Android are able to use the device's motion sensors to turn it into real musical instruments.
Yann Orlarey

CREATION 29TH MARCH 2014 / BIENNALE MUSIQUES EN SCENES 2014 (LYON)
CONCERT 21ST MAY 2015 /THEATRE DE CORNOUAILLE, QUIMPER - FESTIVAL SONIK

SMARTFAUST

4 WORKS FOR SMARTPHONES COMPOSED BY XAVIER GARCIA

Xavier Garcia : composition and direction
Christophe Lebreton : conception and technologic development
Faust Language : realisation of Computer Research Dept (Grame), Yann Orlarey

Program:
- **Bélial** (2014 - 12') for harp and 'choir'' of smartphones.
- **Iblis** (2014 - 10') for clarinet and 'choir'' of smartphones.
- **Méphisto** (2014 - 10'30) for drums and 'choir'' of smartphones
- **Belzebuth** (2014 - 13') for smartphones, with the participation of the audience.

With l'**Ensemble Op. Cit** during the Premiere on 29th March 2014 :
Laure Beretti : harp, **Christian Laborie** : clarinet, **Emmanuel Scarpa** : drums.

Commission Grame.
Production Grame, with the support of Dicream and INEDIT-Projet ANR.
Creation in the frame of Biennale Musique en Scène 2014, at Les Subsistances and Théâtre de la Croix-Rousse (Lyon).

© Pascal Chantier

XAVIER GARCIA

COMPOSER

© Pascal Chantier

Born in 1959. Composer and improviser, he's interested into both things as creating music in studio and playing live on stage. He has composed nearly 30 electronic pieces in INA-GRM (Paris), GMVL (Lyon), or «at home». Since 1987, he's a member of the «ARFI» (Association Looking for an Imaginary Folklore) : he plays sampler and electronic devices in ARFI 's groups as «L'Effet Vapeur»,» 32 Janvier»,»Duo Recio-Garcia», «La Marmite Infernale», «La Grande Illusion», «Potemkine»,» Villerd/Ayler quartet», «Lighthouse», «Bobines Mélodies», «Old, Blind & Deaf «, "Actuel Remix", "Nous Mix",...
Besides Arfi, he also leads projects as «Virtuel Meeting», «Radiorama», «Reel Meeting», "Crossed Meeting. He worked with stage directors as Denis Guénoun, Jean Yves Picq, Dominique Lardenois, Elisabeth Macocco, Jean Paul Delore..., art designers (Philippe Mouillon), movie directors , vidéo artists, 3D movie directors (Claude-Pierre Chavanon, Françoise Petiot, Lorenzo Recio, Fabrice Fouquet), choreographers (Stéphanie Aubin, Ulises Alvarez, Julyen Hamilton), joglers (Jérôme Thomas), and some other musicians and composers (Eric Brochard, Chris Cutler, Brian Eno, Heiner Goebbels, Gianni Gebbia, Alexandre Meyer, Franck Tortiller, Les Percussions de Strasbourg, Hasse Poulsen, Carlo Rizzo, Yves Robert, Guillaume Roy, Norbert Stein ...). He has been member of the French ONJ (National Jazz Orchestra) directed by Franck Tortiller from 2004 to 2008.
He got Electroacoustic composition 1st price in 1980 and "Musical aesthetics" 1st price in 82 both in "Conservatoire National Supérieur de Paris" and obtained the "Aptitude Certificate" for Teaching Electoacoustic music in conservatories in 1985.
website: http://xgarcia.perso.neuf.fr

TOUR IN CHINA

JUNE 2015 : WUHAN, HONG KONG, CHENGDU

SMARTFAUST

COMPOSITIONS OF XAVIER GARCIA

Tour in China : with «Light music» and concerts for smartphones

Festival Croisements / Wuhan
11th June 19h30 Wuhan Theatre
Festival French May / Hong Kong
15th June 20h Alice Cheng Hall, City university
Festival Croisements / Chengdu
18th June 20h LuxeLake hall

Jean Geoffroy, percussions
Xavier Garcia, electronic, direction of smartphones
Christophe Lebreton, computer sound designer

• Mephisto (2014 - 10') Xavier Garcia
for percussions and smartphones choir
• Lifelines (2015 - 12') Xavier Garcia
for electronics and video
• Time and Money (2004) 17' Pierre Jodlowski pour one percussionnist, electronics and video
• Belzebuth (2014 - 13') Xavier Garcia
for smartphones, with the participation of the audience. Commission Grame. Production Grame, with the support of CNC-Dicream and INEDIT-Projet ANR.
• Light Music (2004 - 23') Thierry De Mey
For chef soloist, projection & interactive system. Production Grame in coproduction with Charleroi-Danses
• Table music (1987 - 7') Thierry De Mey
For 3 percussions

Grame was invited by the festival Croisements of the Embassy of France in China, Hong Kong French May festival, in partnership with the A4 contemporary arts center in Chengdu, the Grand Theater in Wuhan, multimedia theater and the City University Hong Kong New Music Ensemble, associated with conservatories in Chengdu and Wuhan, as well as the Modern Academy (Hong Kong).

MEDIATION - TRAINING

SPRING 2015, MOMELUDIES - COMMISSION CLAVICHORDS, LYON - COLLEGE THOMAS RIBOUD, BOURG EN BRESSE

SMARTMOMES

COMPOSITION OF XAVIER GARCIA

Gérard Authelain founded Mômeludies in 1985 on the idea of promoting the musical practice of children within general education or specialized allowing them to sing, play the works of composers of their time.
With the support of the General Directorate of Artistic Creation (Ministry of Culture), the Mômeludies editions solicit composers to write music for children, teenagers, students in primary schools, colleges and music schools so they can tackle the most complete range of musical aesthetics played today (art music, song, jazz, amplified music, world music).

The composer Xavier Garcia has designed a new piece for mobile phones and provided workshops with a college class (Bourg en Bresse) to teach them to manipulate Smartfaust applications. The final restitution on 10th June 2015 took the form of a concert where the play of Xavier Garcia was created by the high-tech-musicians students.

with Thierry Ollagnier (Music teacher at collège Thomas Riboud, Bourg-en-Bresse)

mômeludies

COMMISSION FOR NEW PIECE

20 OCTOBRE 2015, ELECTRONIC MUSIC WEEK, SHANGHAI

NEW COMPOSITION OF **QIN YI**

GROUP BEHAVIOURS: SMART| EXCITED PEACEFUL

Smartphone addiction is one of the main causes that makes modern issues such as anxiety, upset and self-isolation. In this work, smartphones are used as tools to guide audience to experience two alternated states: excited and peaceful, so that one can back to concentration and becomes an integral part of nature.

Conception/Composer/Production : Qin Yi
Co-commissioned by Shanghai Conservatory of Music & Grame, national center for musical creation
Mobile application programme : Weng Ruolun
Technical support : Christophe Lebreton
Percussion : Song Yuchen
Performance : Zoe, Michael, J.C, Cherry
Application icon design : Huang Ruozhou
Thanks : Running Cat Physical Training Camp

IOS

Androïd

Qin Yi
Composer, Assassociate Professor in department of Music Engineering of Shanghai Conservatory of Music. She received degrees from Shanghai Conservatory of Music (Composition and Pipa). Her recent honors include First Prize in 2006 Tsang-Houei Hsu International Music Composition Competition; Honorary Mentions in 2008 Prix Ars Electronica Digital Music Category; the First Prize of Composition Competition in "Chinese Music Jin Zhong Award" and etc. Her music, described as " it was hard not to be entranced" by the New York Times, has been featured at a wide variety of international festivals.Her current commission from Shanghai International Festival of Arts, Shanghai International Electronic Music Week, China Symphony DevelopmentFoundation and etc.

Allen Weng
RIM and sound engineer. He was born in 1991 in China, studied music technology in Shanghai Conservatory of Music from 2010 to 2014, and he continues his master in music technology. He always participates in live musical production: real-time interactive music, sound and visual installation. Since 2010, he has participated in EMW 2011(Electronic Music Week in Shanghai), ICMC 2012, EMW 2013, "Rising Artist Work"in Shanghai International Festival of Art, MANCA2014(Nice),"Esonic3"2015, EMW2015. He also keeps close cooperation in research, master classes, and realization of concert with GRAME, CIRM.

COMMISSION

DECEMBRE 2015, TAIWAN NATIONAL UNIVERSITY OF ARTS, TAIPEI

SMARTFAUST

NEW COMPOSITIONS OF **JIN YAO LIN**

COMPOSER

Sponsored by the Taipei Artist Village, Jinyao Lin is a new generation artist - being both a composer and video artist. His works include music pieces, digital installation and drama. His exhibition Digital Life features two works: Tracks and Auto Music Machine.
Tracks examines the idea of everyone living on their own tracks, sometimes colliding with others and sometimes avoiding others. It depicts how regular patterns of life construct a society like planets in the universe. Collision events create harmonics and, with this, the synchronisation of a mystery atmosphere appears.
Automatic Music Machine generates music and video made by Pure Data, a dataflow programming language. In the video, the connected pixels will find its next step until there are steps no more. It then generates the Baroque style of music where a "counter point" technique is developed. The music and the video repeatedly played, lead to new music and graphics as every step is a random direction.
Jinyao Lin learned composition from the Music Department at Taipei National University of the Art. After his bachelor degree, he obtained a Masters of Fine Art from The Graduate Institute of Tech-Art. He is now a PhD candidate at National Taiwan University's Graduate Institute of Networking and Multimedia, Image and Vision Lab. In 2010, he created an interactive multimedia theatre, "Distortion City", which was given acclaimed reviews. In 2011 he went to Lyon, France as an in-residence artist from DAC Taiwan and had his work «Tracks» published in Opera Lyon

COMMISSION

2015-2019, EUROPEAN PROJECT «ONE» COORDINATED BY ORCHESTRE DE PICARDIE

GEEK BAGATELLES NEW PIECE

BERNARD CAVANNA, ORCHESTRE DE PICARDIE CREATION 20TH NOV. 2016

Bernard Cavanna,
by Christine Labroche and Virginie Pallu

Bernard Cavanna's musical world is strictly his own: iconoclastic, eclectic, willingly provocative, and often filled with a violence drastically opposed to his soft nature. He cultivates contrast by combining a shrewd writing style with popular resurgences, working with tonal as well as with dissonant sonorities, opposing rawness to harmonic subtlety, and shifting from a fine timbre research to brutal sounds. Whether they lull you, shake you, mark you or hurt you, Cavanna's compositions consistently bear the mark of an inner urgency that reflects his thorough attention to the tiniest technical detail according to the intense outlook he has on the radiance or dilemma of humankind underlying his inspiration.
Christine Labroche

With strong encouragement from Henri Dutilleux, Georges Aperghis, Paul Méfano and Aurèle Stroë,Bernard Cavanna (born in 1951) devoted himself to composition.

Winner of the Prix de Rome, allowing him to spend 1985-1986 at the Villa Médicis, an annual creation scholarship, the SACEM Prize for the best contemporary creation (1998), the UNESCO International Tribune (1999) and a «Victoires de la Musique» award, his works have produced a powerful impression on the public and critics alike.
In particular, we will mention Io for voice and eleven instruments, La Confession impudique (1987/92), an opera based on the novel by Tanizaki, Messe un jour ordinaire, a work inspired by Jean-Michel Carré's documentary film Galères de femmes, the Trois chants cruels for soprano and orchestra, ans the Violin Concerto, a work commissioned by Radio-France for violonist NoëmiSchindler and the Orchestre Philharmonique de Radio-France.

Bernard Cavanna has also worked in theater with Antoine Vitez, Stuart Seide, Daniel Martin and Xing Wiang Gao (Nobel Prize), with choreographers Caroline Marcadé, Angelin Preljocaj and Odile Duboc, and xith film-makers Pierre-Henry Salfaty and Alain Fleischer (with whom he has collaborated on a regular basis for the past 12 years).
Alongside his activities as a composer, he has been director of the National Music School of Gennevilliers since 1987 and is also involved with the Ensemble 2e 2m.
In addition, with Laurence Pietrzak, he produced and made a documentary film about composer Aurèle Stroë.
He produced (January 2011) a monographic CD (Prix Charles Cros 2012) including a DVD with documentary directed by Delphine de Blic, «La peau sur la table» (Prix Sacem 2010 of the best musical documentary).
Virginie Pallu

Commission Grame / Orchestre de Picardie
Production Grame / Orchestre de Picardie
Residency Grame, in collaboration with UCA - University of Creative Arts Canterbury

Orchestra
2 flutes (Picc.)
2 Clarinets (Eb & H)
2 Oboes (Eng.Horn)
2 Bassoons (contrabass.)
2 Horns
1 Trumpet
1 Trombon
Timpani
1 percussion
Strings:
8 6 4 4 2 (5 strings)

Smartphone Choir
20 persons

Any sound body set in motion by a composer is music (Berlioz)

«When Damien Pousset asked me to write a piece for smartphones and symphony orchestra, I immediately replied him that he had addressed the worst person, as new technologies - and especially smartphones - always seemed to me so weird to sound imaginary which were mine (accordion variety, barrel organ, brake drums, bagpipes ... arouse my curiosity more than the essential tools of new music: Open- music, Max MSP, AudioSculpt...).
The technology developed by Christophe Lebreton, to transform the smartphone into a small instrument yet seduced me, especially as «the player» can actually play with this new tool, tone module, varying the parameters, through a simple gestures.
The challenge will also be to offer Christophe Lebreton other sounds, other sound worlds, other interpretive gestures, depending on the direction taken by the part.
The piece will confront a group of 20 smartphones and an orchestra of about 12 musicians. Smartphones will act in opposition to the orchestra - «concertante» form - or integrate proposing new textures.
It is expected also that the public can participate at some point in the room, always with this application «Smartfaust» their mobile.»
Bernard Cavanna

The concert premiere will be performed by Orchestre de Picardi, on **20th November 2016 in Paris Philharmonie.**

All participants (beginners, amateur and professional musicians) will perform the new piece on stage.

This piece will part of a program called "Darwinian orchestra", that will be **performed by the orchestras, members of ONE in 2017-2019 : Jena (Germany), Zilina (Slovakia), Ljubljana (Slovenia), Katowice (Poland), Zlin (Czech Republic), and Sofia (Bulgaria)**

ONE - The European network for orchestras

ONE® - an Orchestra Network for Europe was established in 2004 by the Orchestre de Picardie. This European network of symphony orchestras, unique, defends artists mobility projects and works across 11 countries of the European Union.

Since its inception, the European network of orchestras within the framework of the Culture Programme, received support from the European Commission on 4 occasions, recognition of proven experience in the governance of a trans-European network.

ONE® The network consists of the coordinator: the Orchestre de Picardie (France), and 6 co-organizer orchestras: the Jenaer Philharmonie (Germany), Štátny Komorny Orchester Žilina (Slovakia), the Simfonicni Orkester RTV Slovenija (Slovenia), the Im Filharmonia Slaska. Henryka Mikołaja Góreckiego (Poland), the Filharmonie Bohuslava Martinu (Zlín - Czech Republic) and New Symphony Orchestra (Sofia - Bulgaria). It is associated to University of Creative Arts (Canterbury, UK).

ONE® The network receives the support of the Executive Agency of the European Commission, one from each of the co-organizers and their financial partners including the Picardy Regional Council and the Ministry of Culture and Communication, DRAC Picardie.

EXPERIMENTATION

DRONES & MUSIC **SMARTFAUST ON AIR**

Biennale du Design / Saint-Etienne (42)
14th and 15th March 2015
SmartFaust on air, concert performance

Music : Xavier Garcia
Dévelopment SmartFaust : Christophe Lebreton
Conception and Design : Random (lab).

Smartfaust On Air is a project of spatial interaction and sound from the mobile phone application Smartfaust. Basically, this application developed by Grame allows a user to transform their smartphone into a musical instrument he can play by running an improvised or choreographed gestures. Smartfaust On Air takes this principle by turning it into entertainment device via a «ballet» of flying drones. Drones, attentive to the conductor present at each session, obey his gestures to create an instrumental chorus via the application. Members of the public, in turn, provided with the application via their phone, are invited to participate in the concert also according to the director's gesture: the public becomes the performers of this music piece where no session is never the same.

DEVELOPMENT

OVERVIEW OF THE PROGRAM **SMARTFAUST**

CHRISTOPHE LEBRETON

CONCEPTION AND TECHNOLOGIC DEVELOPMENT

After a musician and scientific training, he joined the team of GRAME in 1989. He works for research and development of tools for creating, while confronted daily with the realities and diversity of contemporary productions: Great shows, international concerts, festivals «Musiques en scène», sound installations, discographies ... Since 2003 he worked specifically on motion capture and stage increased. He experiences what he calls «instrumental set design» and is interested in all arts where his research and developments are related.

SAMPLES OF THE SMARTFAUST APP PROGRAMMING

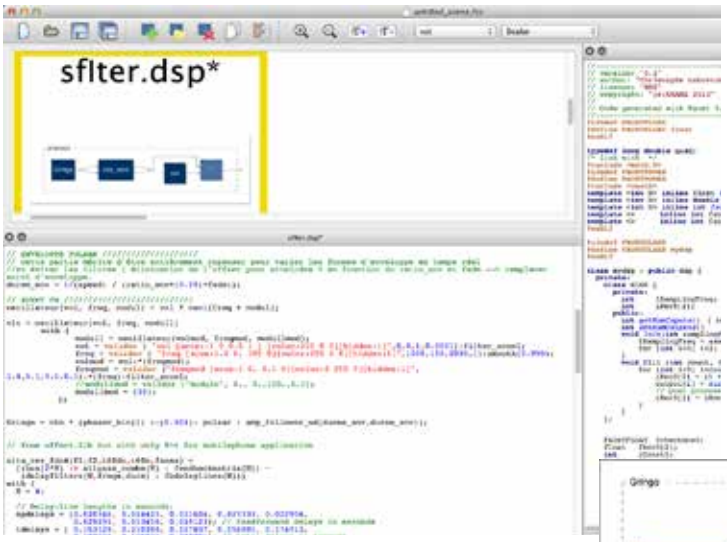

programmation on Faustworks

SVG diagram

NOTATION
SAMPLES OF THE SCORES **SMARTFAUST**

EXTRACT FROM THE SCORE «BELZEBUTH» (X. GARCIA) :

Jeu 3 : « ouragan »
Position de départ : **PIED**.

Mouvement intenses. « continuum » de vent modulé en hauteur. Varier les vitesses, accélérer, freiner pour varier la hauteur du filtre.

Séparer d'un geste le public en 2 groupes.

GROUPE A :
Continuer mode de jeu 3 « Ouragan »

Decrescendo et STOP

- LOAD **sfiter (2)**
- **Position GAUCHE** puis **ON (3)**

GROUPE B : STOP

- LOAD **sfiter (2)**
- **Position GAUCHE** puis **ON (3)**

Jeu 1 : Découverte de l'itération

Petits mouvements sur la tranche (en penchant la tête en avant pour décélérer, revenir à **G** pour accélérer)

EXTRACT FROM THE SCORE «BELIAL » (X. GARCIA) :

1

Harpe

Développer une improvisation autour des notes pivots suivantes : (N°de mesure = N° des sons de sfplayer)

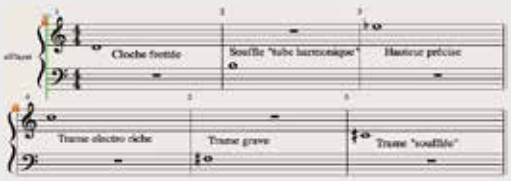

Téléphones

En 2 groupes : Load **sfplayer** >> **TÊTE** >> groupe A Son N°1 / Groupe B son n°2 >> **ON**
Jeu « entretien/variation ». Variation de timbre en penchant vers Pied

1	3	6

>>> load **sfiter**>ON > **G**

2	5	4

Passage d'un son à l'autre par **TÊTE** DESSUS (silence)

2

Jouer autour de la note pivot : Si3 / jeu itératif , variations de vitesse / Note , clusters

Groupe A **: Jeu 1 « Découverte de l'itération »** / Groupe B **: sfplayer** son n°4 position **PIED**
(Extinction) puis rejoindre groupe A

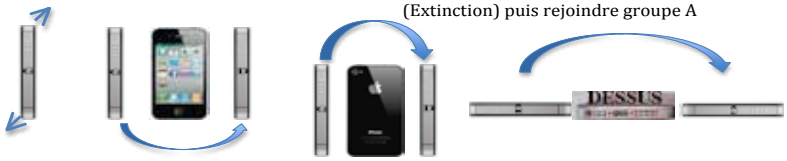

PRESS CUTS

Le Télégramme
BREST

Pays : France
Périodicité : Quotidien
OJD : 203298

Date : 20 MAI 15
Journaliste : Delphine Tanguy

SmartFaust. Premières gammes avec portable

Delphine Tanguy

Sous la conduite du chef d'orchestre Xavier Garcia, des étudiants des Beaux-Arts ont fait, hier, leurs gammes dans cette création musicale pour smartphones et solistes professionnels. Découverte inattendue des qualités sonores des téléphones portables.

Xavier Garcia, compositeur et chef d'orchestre, a guidé les premiers pas des candidats à l'expérience.

S'appuyant sur un ensemble d'applications pour smartphones développés par Grame, Centre national de création musicale de Lyon, à partir du langage de traitement du son « Faust », « SmartFaust » a été conçu pour être un concert participatif. Sous la direction du chef d'orchestre Xavier Garcia, compositeur et improvisateur touche-à-tout, un chœur de volontaires est ainsi invité à accompagner les instrumentistes solistes (harpe, clarinette et batterie) de l'ensemble Op. Cit pour les trois premières pièces du programme intitulées « Bélial », « Iblis » et « Méphisto. « Belzébuth », la quatrième œuvre fait, quant à elle, intervenir le public qui aura au préalable téléchargé cinq applications : Sfwindy, Sfiter, Sfsiren, Sftrumpet et Sfmoulin correspondant chacune à un son particulier, généré par le mouvement du smartphone.

> « Très proches les uns des autres, il y a un effet d'ensemble qui est bien plus beau ».
>
> Xavier Garcia, compositeur et chef d'orchestre

Une matière sonore surprenante et ludique

Lors d'un atelier qui s'est déroulé, hier, au Théâtre de Cornouaille et va se poursuivre aujourd'hui avec les musiciens solistes, une dizaine d'étudiants des Beaux-Arts, qui se sont portés candidats pour tenter l'aventure, ont découvert une matière sonore inattendue et très ludique. Après avoir pris en main leur téléphone portable, ils ont expérimenté les différentes applications à leur disposition et répété les morceaux en suivant les indications et les mouvements du compositeur.

« C'est plus intéressant quand on est très proches les uns des autres car il y a un effet d'ensemble qui est bien plus beau », leur a indiqué Xavier Garcia, attentif à une exécution harmonieuse de la partition.

« Les smartphones réagissent à n'importe quel mouvement et on s'arrête la tête en haut », précise le chef d'orchestre qui les guide avec des petites affichettes où sont inscrits les numéros des applications à actionner mais aussi différentes indications : « Changer l'inclinaison », « une inclinaison différente chacun » pour obtenir l'effet sonore recherché.

Le public devrait donc découvrir et éprouver le soir même du concert les sensations d'être « musiciens d'orchestre » et de participer, sans compétence musicale particulière, à une création de musique électronique collective.

▼ *Pratique*

« SmartFaust », création musicale de Xavier Garcia/Ensemble OP.CIT, jeudi à 20 h à l'Atelier du Théâtre de Cornouaille, dans le cadre du Festival Sonik. Tarifs : 9 € à 25 € Tél. 02.98.55.98.55.

CONCERT GRAME

TECHNICAL DATAS **SMARTFAUST (X. GARCIA)**

update : 26/05/1014
Technical contact : Christophe Lebreton / lebreton@grame.fr

SOUND

Diffusion Son :
- 1 console de mixage adaptée aux nombre de microphones (cf prise de son)
- 1 Système de diffusion en façade (type Amadeus MPB600, MTD115, D&B etc...)
- 3 bains de pieds de type MPB200R ou MTD118 etc.. (harpe, batterie et Clarinette)

Prise de son chef et musiciens solistes :
- 1 microphone SM58 (speaker chef)
- 1 microphone statique cardioide types KM184 (smartphone chef)
- 2 microphones C414 AKG (overhead batterie)
- 3 microphone KM184 (2x harpe, 1 clarinette)
- 7 pieds de microphone standard avec perchette

Prise de son choeur de smartphones :
Nota : Ideally there should be one static cardïodes microphone for 2 Smartphone players. Depending on the resources they can be reduced to 1 micro / 3 players. The number of mikes for the conductor and the soloists has to remain the same.The mixing console is depending on the number of microphones. In case there are fewer than 20 people in the chorus, we still retain the 10 choir microphones.

Example for a choir of 20 Smartphones :
- 10 microphones statiques cardioides types KM184 (prise de son smartphones)
- 10 pieds de microphone standard avec perchette
etc...

STAGE

- prévoir 2 niveaux de Praticable en plus de la scène pour le choeur de Smartphones
(quantité a adpater en fonction du lieu et du nombre de participant)

LIGHTS

- un éclairage global pour le choeur et 3 zones pour les solistes et 1 zone pour le chef
(le chef utilise des panneaux A3 pour diriger et communiquer avec le public et le choeur de smatphones, ceux-ci doivent être bien éclairés sous tous les angles)

BACKLINE

Harpe : une harpe table large, 46 ou 47 cordes

Batterie : (ex SONOR « Hilite »)
- 1 Grosse caisse 18 pouces
– 1 Tom Médium 12 pouces
– 1 Tom de 14*14 sur pied
- 1 caisse claire 5 122x14 bois ou métal

Qu'importe la marque mais surtout concernant la Grosse Caisse
- 2 peaux non trouées blanches REMO ambassador
- tous les fûts équipés de peaux blanches REMO ambassador

1 pédale de grosse caisse 1 pied de charley
1 pied de caisse claire
3 pieds de cymbale
1 tapis (2 x 2 m)
1 siège de batterie réglable en hauteur

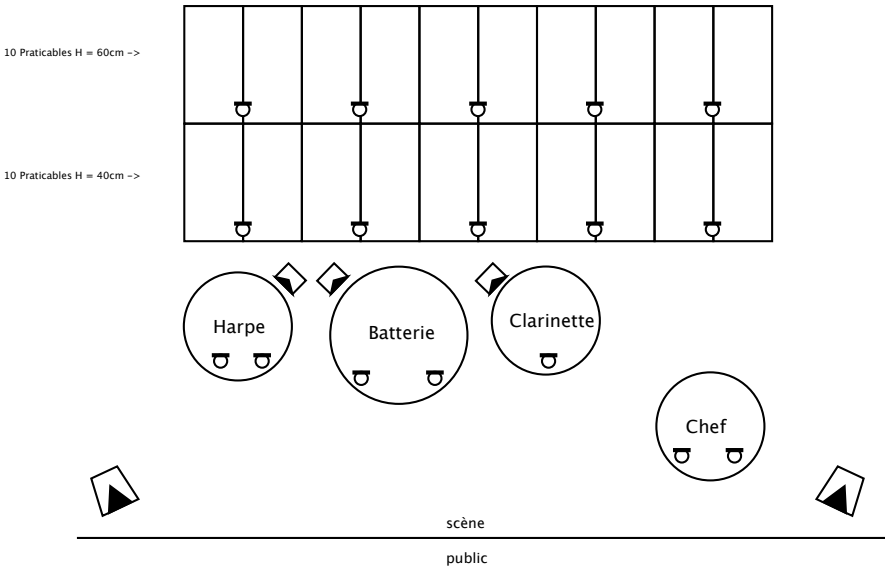

GRAME, NATIONAL CENTER FOR MUSICAL CREATION – LYON

Grame was set up in 1982 by Pierre-Alain Jaffrennou and James Giroudon, and in 1996 it was certified as a «Centre National de Création Musicale». Its mission is to promote the conception, production and distribution of new works, to contribute to the development of scientific and musical research, and to construct vital bridges between creative artists and the public.

For all its activities which have wide influence in France and abroad, Grame's work encompasses three main areas with specific and complementary skills, brought together in the same legal and administrative organisation :
- a centre for music creation bringing together production, distribution and training. These activities are orientated towards diversity, combining new technologies with the most varied of instrument devices; welcoming resident composers; and utilising a procurement policy. Although it invites experienced composers, Grame makes use of various measures to encourage creation by young people (competitions, etc.).
- a research centre with a permanent scientific team which implements a fundamental and applied research policy to music information technology. Two main areas of work are favoured: the structure of musical systems and formal languages for music composition.
- Biennal Musiques en Scène : since 1992, each March, Grame has been presenting Musiques en Scène, a multidisciplinary showcase for musical creation. It became a biennial in 2002. And there are also the Journées Grame, in the inter-biennial years.

Many training activities are organised for a varied public: artistic courses in schools; proposed activities in higher and specialised education; masterclasses and cycles of meetings in liaison with resident composers.
International projects in the domains of creation, research and education are regularly organized in collaboration with partners in other parts of Europe, North America and China, notably in the general framework of programs supported by the European Commission.

Grame has set up partnerships with the Ministry of Culture, the Rhône-Alpes region and the City of Lyon.

GRAME has organised several international tours, for instance 2009 Christophe Desjardins in the USA and Mexico, then 2013 in Asia (maps below), or 2013 Wilhem Latchouma in the USA.

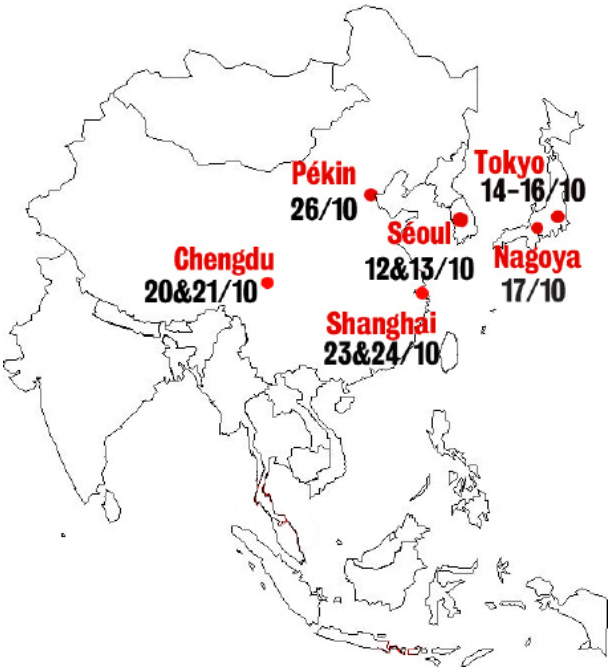

Contact

Aline Valdenaire
Production

Grame, centre national de création musicale

valdenaire@grame.fr
+33 (0)4 72 07 37 00

www.grame.fr

Centre national de création musicale
11 Cours de Verdun-Gensoul
69002 Lyon - France